Profile

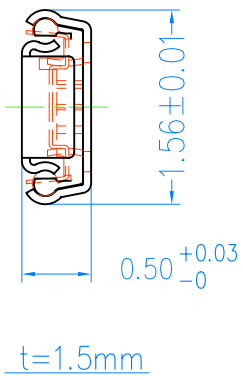

Instruction

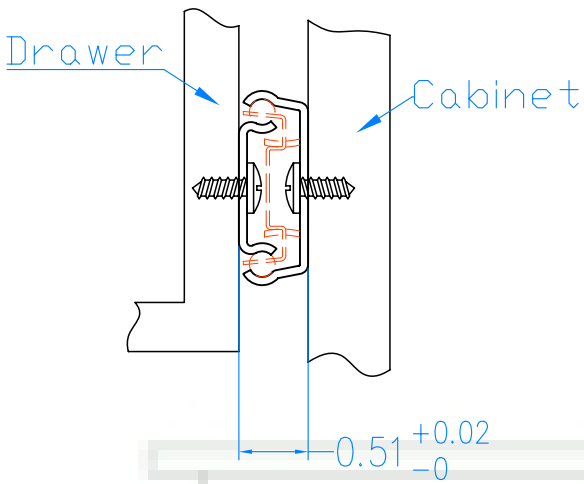
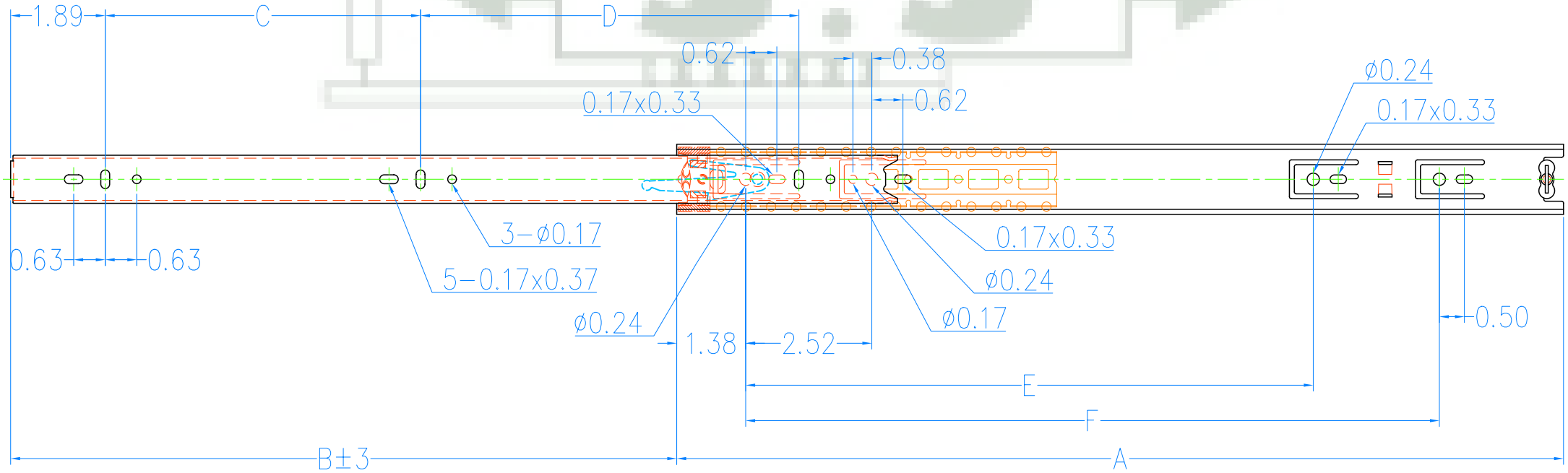
Item No.	Slide Length A(Inch)	Slide Travel B±3(Inch)	C(Inch)	D(Inch)	E(Inch)	F(Inch)
2136T-12	11.81	8.46	5.04	3.78	8.82	–
2136T-14	13.78	9.65	3.78	6.30	10.08	–
2136T-16	15.75	11.81	5.04	7.56	12.60	–
2136T-18	17.72	13.31	6.30	7.56	11.34	13.86
2136T-20	19.69	14.76	7.56	8.82	11.34	16.38
2136T-22	21.65	16.26	7.56	10.08	11.34	16.38
2136T-24	23.62	17.72	8.82	11.34	12.60	18.90
2136T-26	25.59	19.21	10.08	11.34	13.86	21.42